REV	DESCRIPTION	DATE
1		

	X
無墊高	5.6mm
墊高2.0mm	7.6mm

SPECIFICATION
MATERIAL
Insulator: LCP , rated UL94V-0
Contacts: PhosPhor Bronze (C2680-1/2H)
Shell: Stainless Steel (SUS304-H)
CONTACT PLATING
Underplate: 50u"~100u" Nickel
Contact area: 15u" Selective gold
Solder tails area: 100u"~200u" Tin (Lead Free)

Part no.

752 D H 24 M C T S3 S X A 3
1 2 3 4 5 6 7 8 9 10 11 12

1.SERIES NO.
752=Combo Series
2.D=SMT Type
3.GREEN OPTION:
H=RoHS (Matte)(Halogen Free)
4.CONTACT NUMBER:
24=24 PINS
5.CONTACT TYPE:
M=MALE
6.CONTACT AREA PLATING:
C=15u" GOLD
7.SOLDER TAILS AREA PLATING:
T=100u"~200u" TIN(Lead Free)
8.APPLY TYPE:
S3=CFast 板端
9.SHELL PLATING:
S=Stainless Steel
10. 1=Stand off 0
2=Stand off 2.0
11.PACKING STYLE:
A=TRAY
12.INSULATOR COLOR:
3=Black

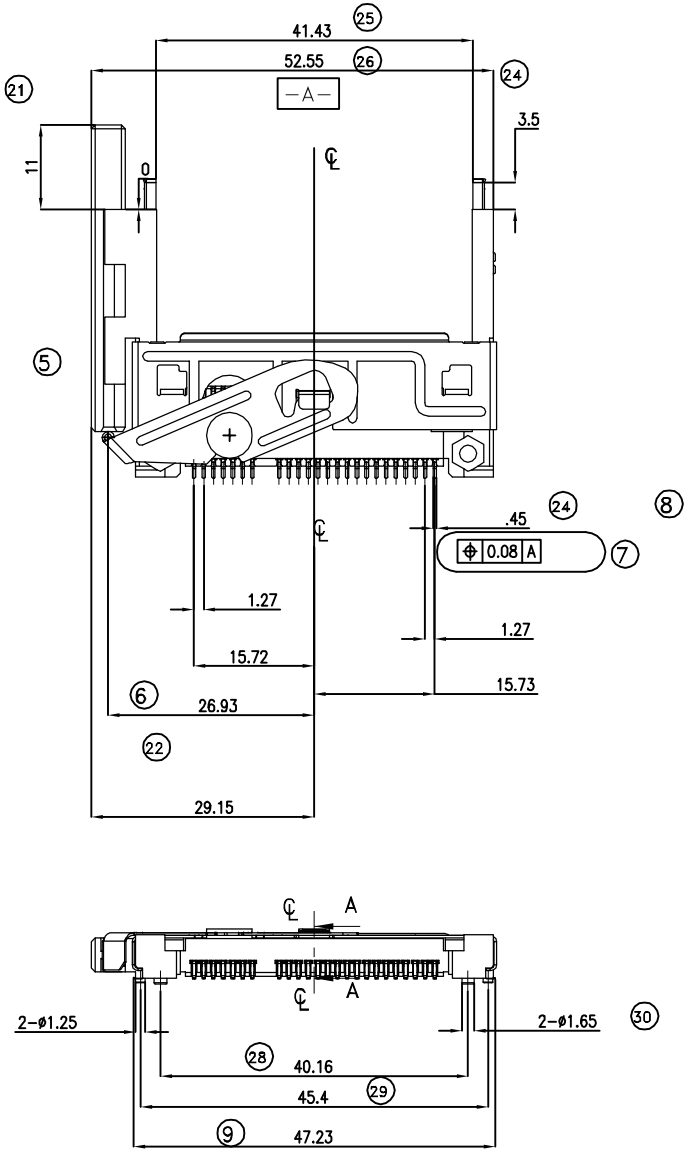

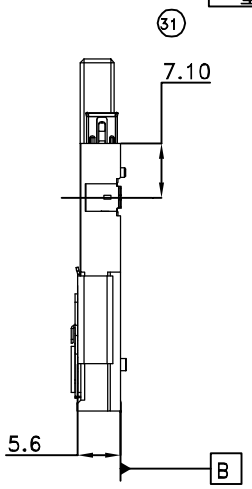

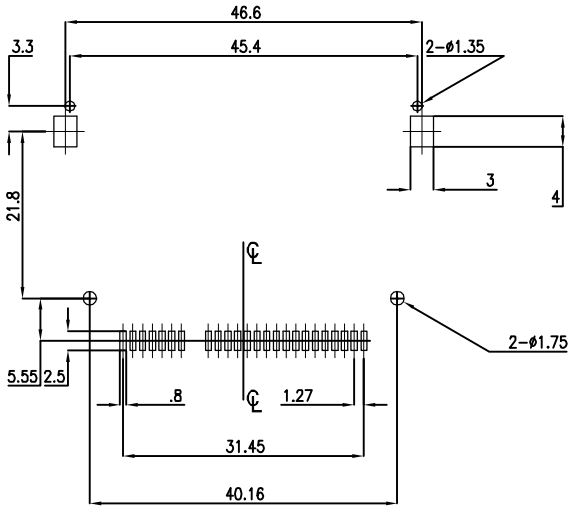

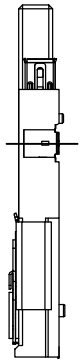

無墊高

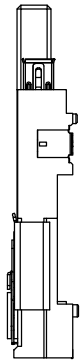

墊高2.0

For SIP

ST For CmK/Cpk

Recommended P.C.B LAYOUT
Tolerance : +/-0.05mm

TOLERANCE		MATERIAL	UNITS	SCALE	DATE		DRAWN NANE:	DWG NO.
.X ±0.25	X° ± 2°		mm	1 / 1	20110922	东莞市汉硕电子科技有限公司	Cfast 板端侧推 1/2	JK0080628L3
.XX ±0.15	X°X' ± 1°	APPROVAL	CHECKED zhangbin	DRAWN zhangbin	PROJ.			PART NO.
.XXX ±0.10								